DWG NO.
SX500S

REVISIONS				
REV	DESCRIPTION	BY	APPR.	DATE

MODEL 500S

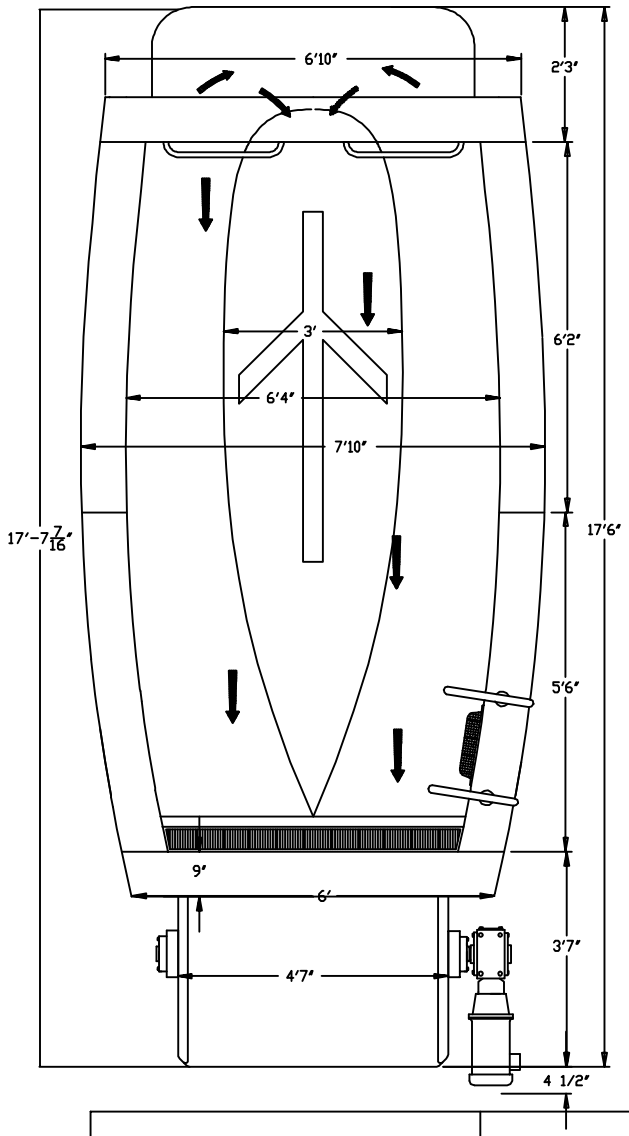

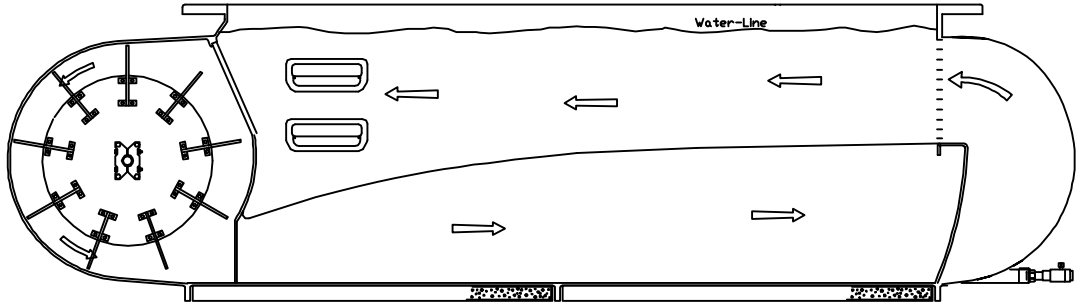

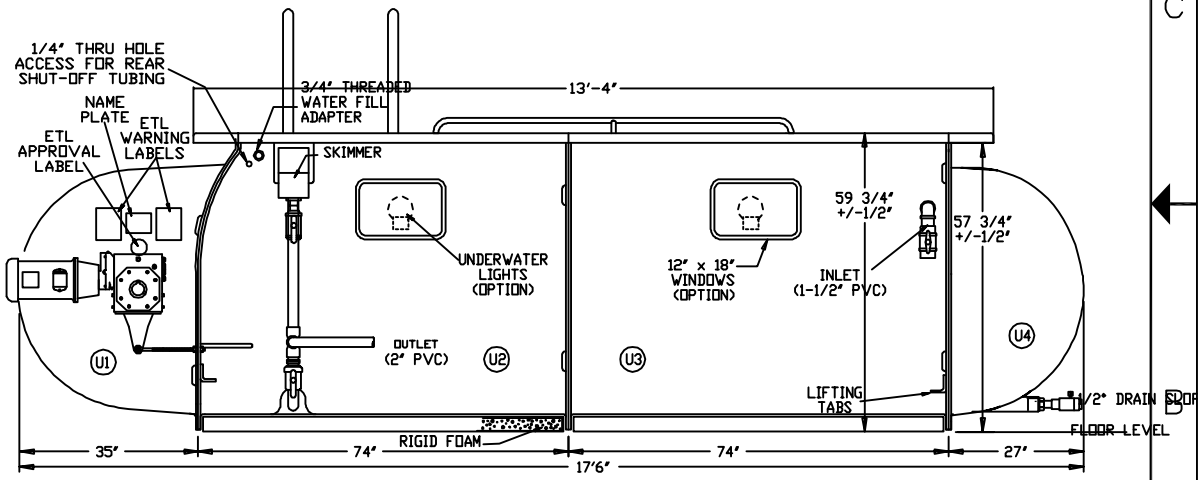

NOTE:
The tolerance of +/- 1/2" is due to the compression of the foam pad.
If both windows and lights are ordered then the lights are mounted forward of the windows.

NO.	PART NO.	DESCRIPTION	QTY

PARTS LIST

NEXT ASSY	USED ON

APPLICATION

SWIMEX , INC
846 Airport Rd. Fall River, MA 02720
TEL. (508) 646-1600 FAX (508) 675-0525

.X	.XX	.XXX	ANGLES
±.1	±.01	±.005	±.5°

UNLESS OTHERWISE SPECIFIED:
MACHINED SURFACE FINISHES 125√
MACHINED FILLET RADII .015-.030

ALL DIMENSIONS IN INCHES

THIRD ANGLE

THIS DOCUMENT IS THE PROPERTY OF SWIMEX AND IS NOT TO BE USED OR REPRODUCED IN WHOLE OR IN PART WITHOUT WRITTEN PERMISSION.

PROJECT: MODEL 500S
TITLE: SWIMEX SYSTEMS MODEL SX500S
SIZE: A
DWG NO.: SX500S
REV: A
PART #:
DR BY: D.E.N.
CHK'D BY:
APP'D BY:
FILE: POOLDRAWINGS\SX500S
DATE: 11/19/98
SCALE:
SHT: 1 OF 1
DWG NO. SX500S